REVISIONS			
REV.	DESCRIPTION	DATE	APPROVED
1	INITIAL RELEASE OF DRAWING	10/8/2014	BS

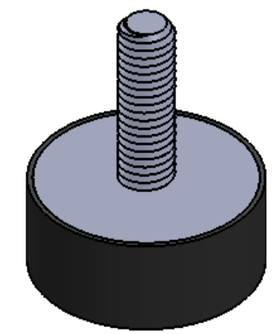

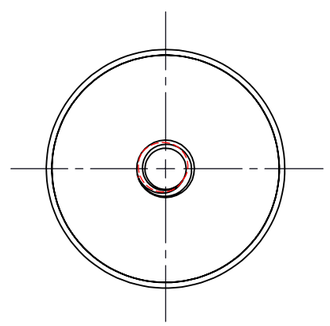

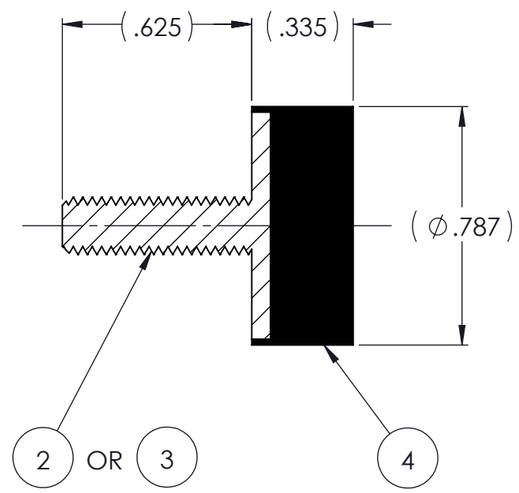

AR	ELASTOMER	K825-4	1	4
1	MK460-M6	MK460-M6		3
1	MK825	MK825		2
	K825	K825		1
QTY.	DESCRIPTION	PART NUMBER	MATERIAL OR NOTES	ITEM

NOTES:

1. MATERIAL: ELASTOMER AND DUROMETER OF 40, 50, 60 OR 70 TO BE SPECIFIED.
2. ALL DIMENSIONS ARE REFERENCE.
3. AVAILABLE WITH THREADS OF 10-32 UNF AND M6 X 1.0.

PROPRIETARY AND CONFIDENTIAL

THE INFORMATION CONTAINED IN THIS DRAWING IS THE SOLE PROPERTY OF KARMAN RUBBER. ANY REPRODUCTION IN PART OR AS A WHOLE WITHOUT THE WRITTEN PERMISSION OF KARMAN RUBBER IS PROHIBITED.

	SIGNATURE	DATE
DRAWN	B. SENECAL	10/08/2014
CHECK	S. BROWN	10/08/2014
ENGR	B. SENECAL	10/08/2014
QA		
STRESS		
APPR		

UNLESS OTHERWISE SPECIFIED:
DIMENSIONS ARE IN INCHES
TOLERANCES:
.X =
.XX = ± 0.031
.XXX =
ANGLES = ±1°
INTERPRET GEOMETRIC TOLERANCING PER: ASME Y14.5M-1994

KARMAN RUBBER VIBRO-INSULATORS®
FOR CONTROLLING NOISE, SHOCK & VIBRATION

TITLE: K825 SERIES VIBRO-INSULATOR WWW.KARMAN.COM

SIZE	CAGE CODE	DWG. NO.	REV
B		K825	1

DO NOT SCALE DRAWING | SCALE: 2:1 | WEIGHT: .25 OZ. | SHEET 1 OF 1